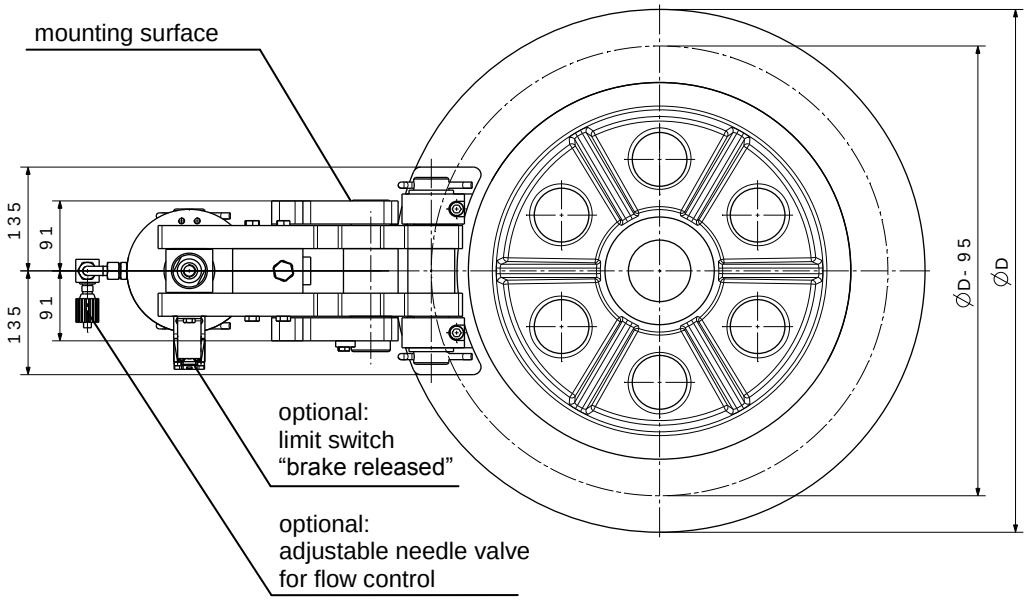

brake type		RHI 30	RHI 56	RHI 70	RHI85
braking force (μ = 0,35)	F_B	30 kN	56 kN	70 kN	85 kN
release pressure	p	40 bar	65 bar	80 bar	90 bar

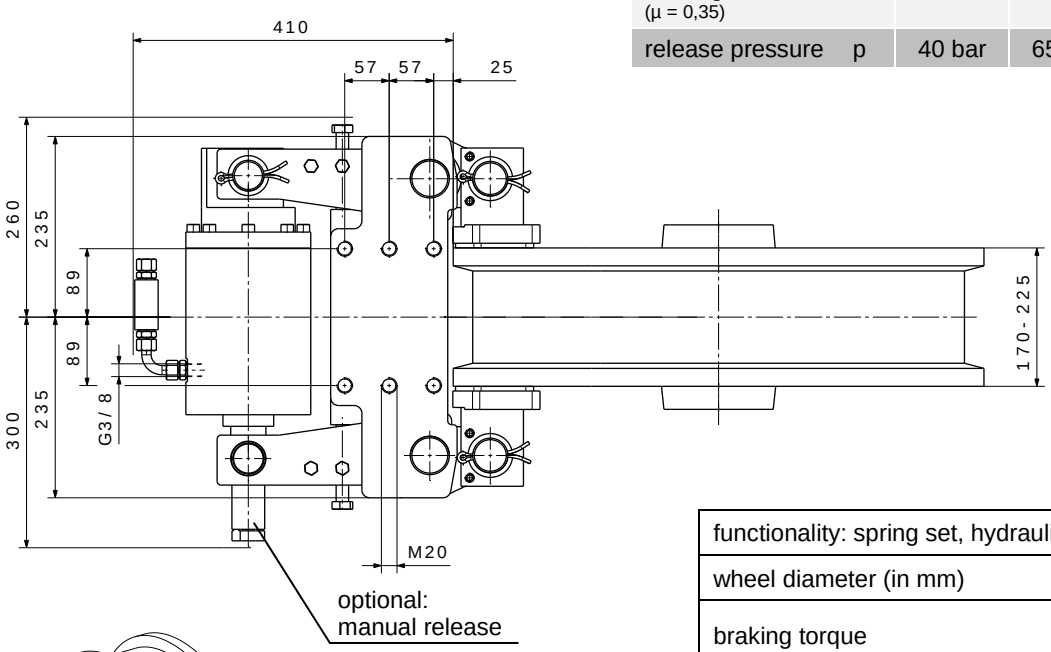

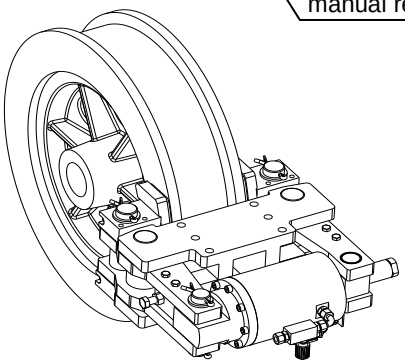

functionality: spring set, hydraulically released	
wheel diameter (in mm)	ØD
braking torque	$M_{Br} = \frac{ØD - 95}{2} \cdot F_B$
retracted clearance per side	c = 1.5 mm
max. oil volume	V = 0.18 ltr.
wheel width	b = 170 – 225 mm
weight	m = 180 kg
options:	• manual release • adjustable needle valve for flow control • limit switch “brake released” • limit switch “linings worn”